D000C004

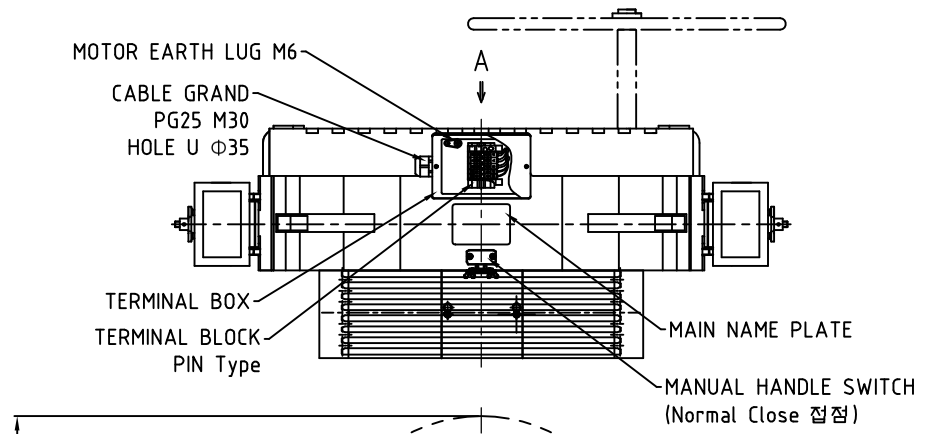

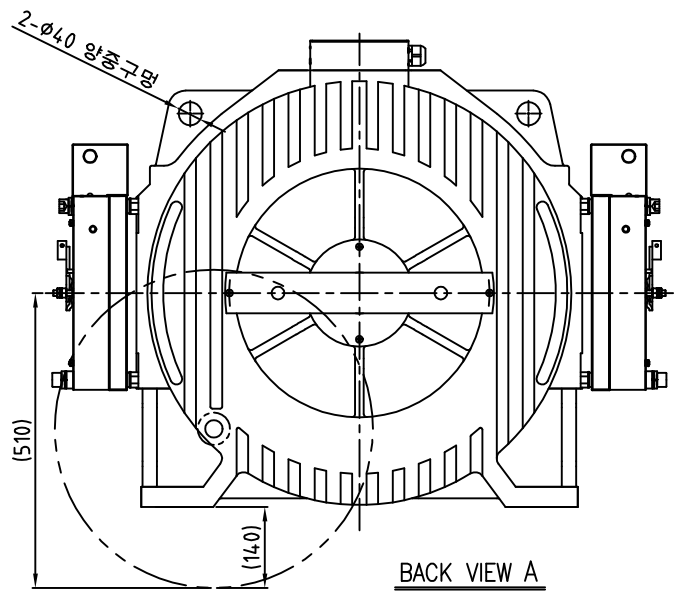

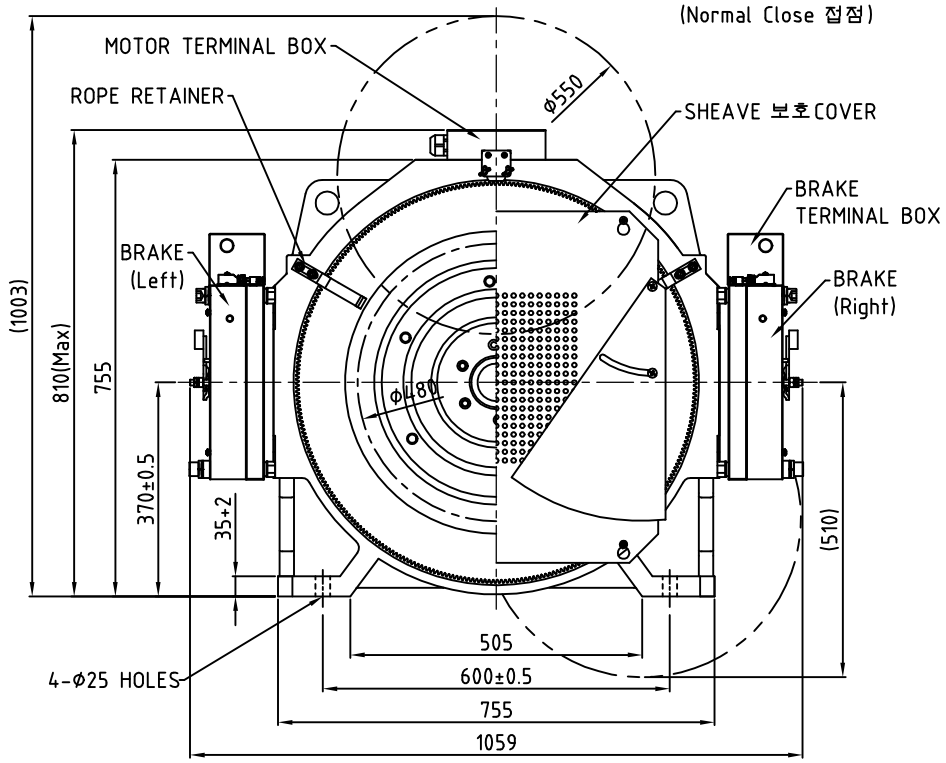

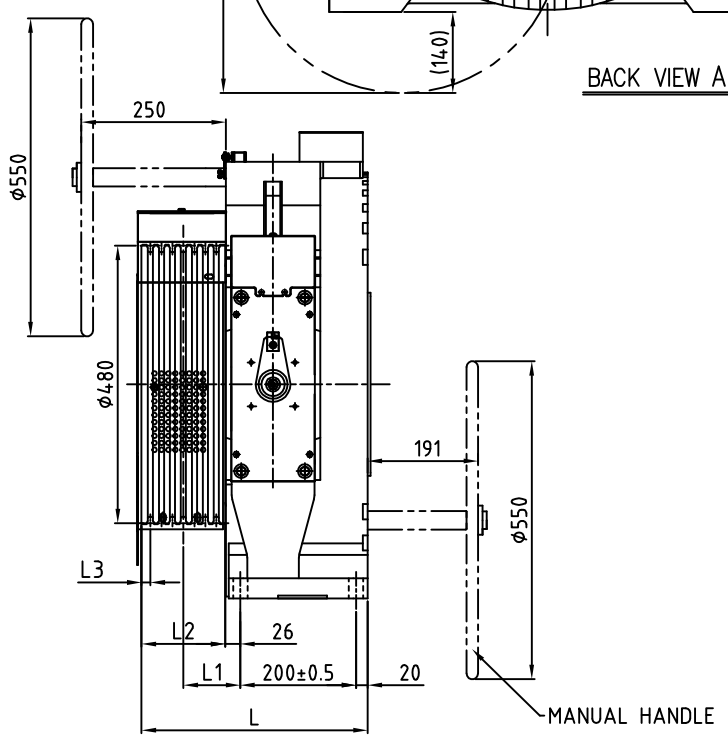

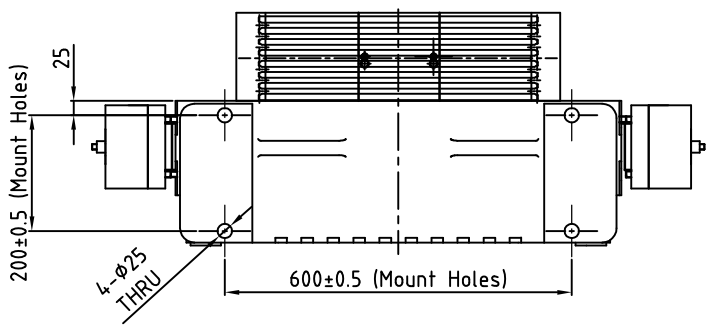

Groove Detail
(Scale 10:1)

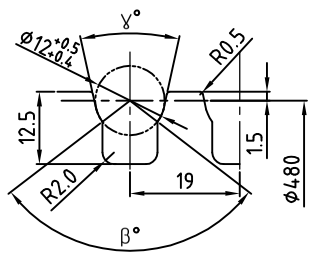

Sheave & Groove 변화 치수표

SH. Dia.	Φd	본수	L	L1	L2	L3	β°	γ°	비 고
Φ480	12	4본	376	91	130	36.5	95	25/30	
							105	25	
Φ480	12	5본	376	91	130	27	95	25/30	
							105	25	
Φ480	12	6본	376	91	130	17.5	95	25/30	
							105	25	
Φ480	12	7본	391	98.5	145	15.5	95	25/30	
							105	25	

GEARLESS TRACTION MACHINE SPEC TABLE

TRACTION MACHINE	Model Name	MCK500	
	Type	Single Wrap Gearless	
	Shaft Load [kg]	10,000	
	Roping	1 : 1	2 : 1
	Rated Load [kg]	450～1,000	1,000～2,000
	Rated Speed [m/s]	0.5～2.0	0.5～2.5
	Rated Power [kW]	1.5～13.1	3.4～32.5
	Rated Volt. [V]	380	
	Rated Current [A]	9～30	10～75
	Rated Freq. [Hz]	8.0～32	16～79.6
	Rated Revol. [rpm]	20～80	40～199
	Rated Torq. [N.m]	690～1,560	800～1,560
	Pole	48P	
	Rated Operating Time	40%ED / 1 HOUR DUTY	
	Max Hoisting Height[m]	100	
	IP Class	IP41	
	Weight [kg]	765	
BRAKE	Model	EMK12K	
	Brake Type	Drum-Block Type	
	Braking Torq. [N.m]	2×1,877 = 3,754	
	Pick-up Volt. [V]	DC 110	
	Hold Voltage [V]	DC 80	
	Pick-up Current [A]	2×1.4 (parallel)	
	Hold Current [A]	2×1.02 (parallel)	
	Coil Insulation Class	F	
ENCODER	Model	ERN1387 (Heidenhain사)	
SHEAVE	Sheave P.C.D [mm]	480	
	Rope Dia. [mm]	Φ12	
	Groove count [본]	4～7	
	Pitch [mm]	19	
BEARING	Front Bearing	32221CC/W33	
	Rear Bearing	30313-2RS	
MANUAL HANDLE	TM Gear Teeth	294	
	Handle Gear Teeth	12	
	Handle Wheel Dia.	550	

DISTRIBUTION

MARK	REVISION	DESCRIPTION	DATE	NAME

	NAME	DATE
DWG SIZE A3	[mm]	
DESIGNED BY	Y. B. PARK	'25.04.09
CHECKED BY	Y. H. ROH	'25.04.09
APPROVED BY	N. J. CHOI	'25.04.14

SCALE 1:1 UNIT mm

DWG TITLE: 외 형 도

MODEL NAME: MCK500

DWG NO. D000C004 Page 1/2

D&I Solution 디앤아이 솔루션(주)